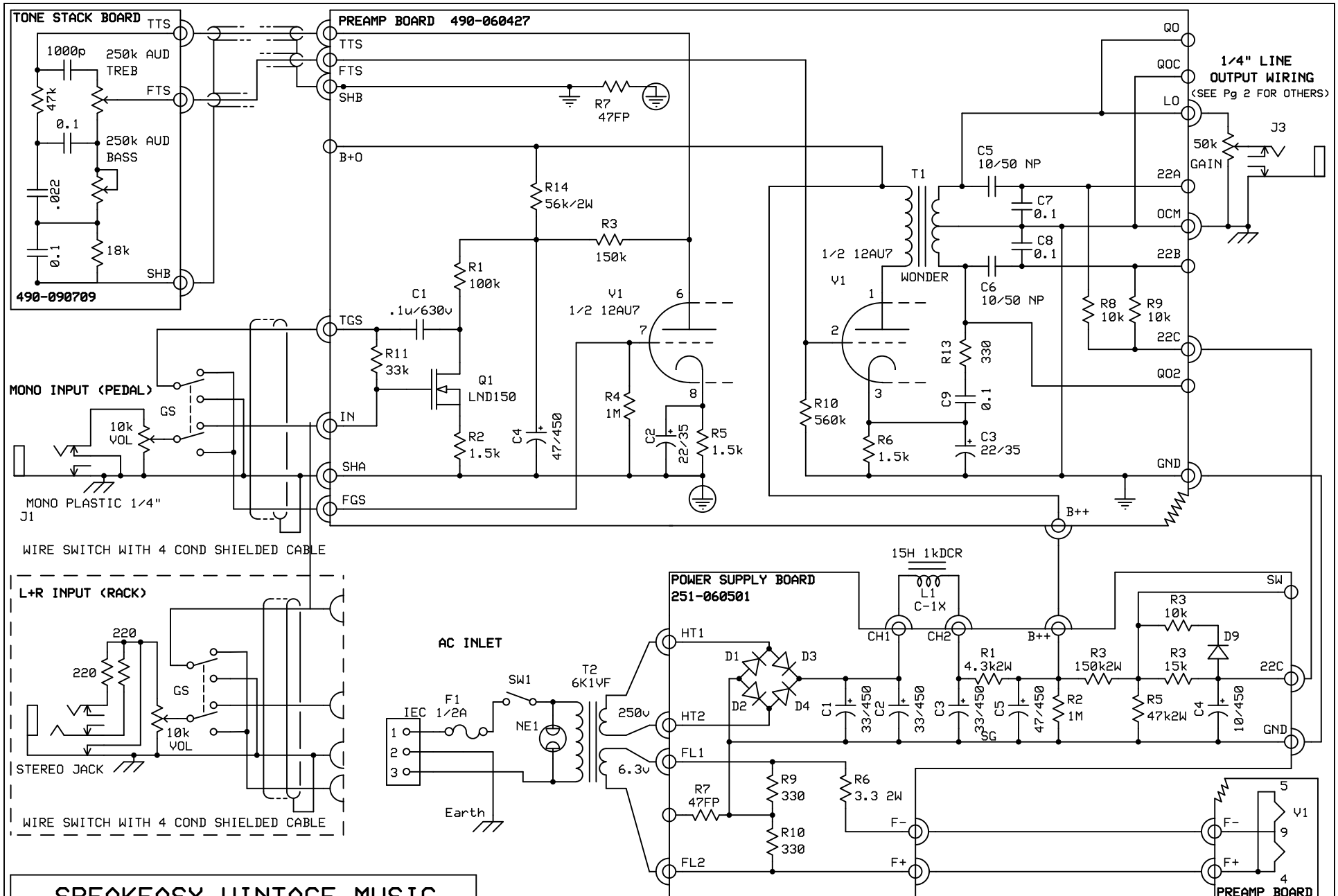

SPEAKEASY VINTAGE MUSIC

VINTAGE TUBE PREAMP

T. Thompson S. Hayes	VTP D: 9/22/2010	Page 1 of 2