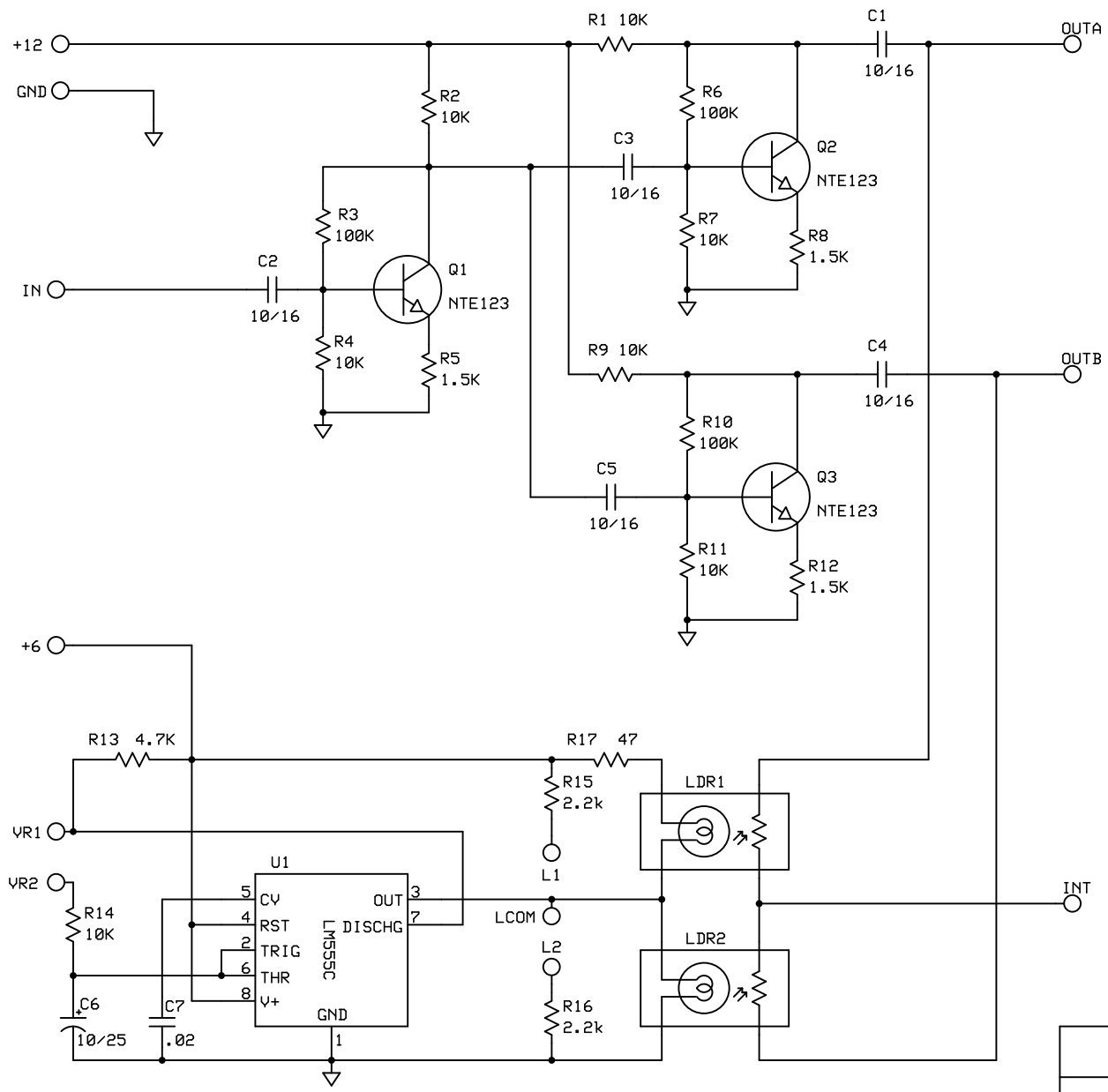

ASSEMBLY NOTES

Connect 100K rheostat from "VR1" to "VR2" for speed control

SPEED 100K

Connect 5K rheostat from "INT" to ground for Intensity control

INTENSITY 5K

LEDs - LED1 Anode to L1, Cathode to LCOM; LED2 Anode to LCOM, Cathode to L2

Speakeasy Vintage Music

Suitcase Vibrato

Steven Hayes	Rev -002 03/01/04	Page 1 of 1