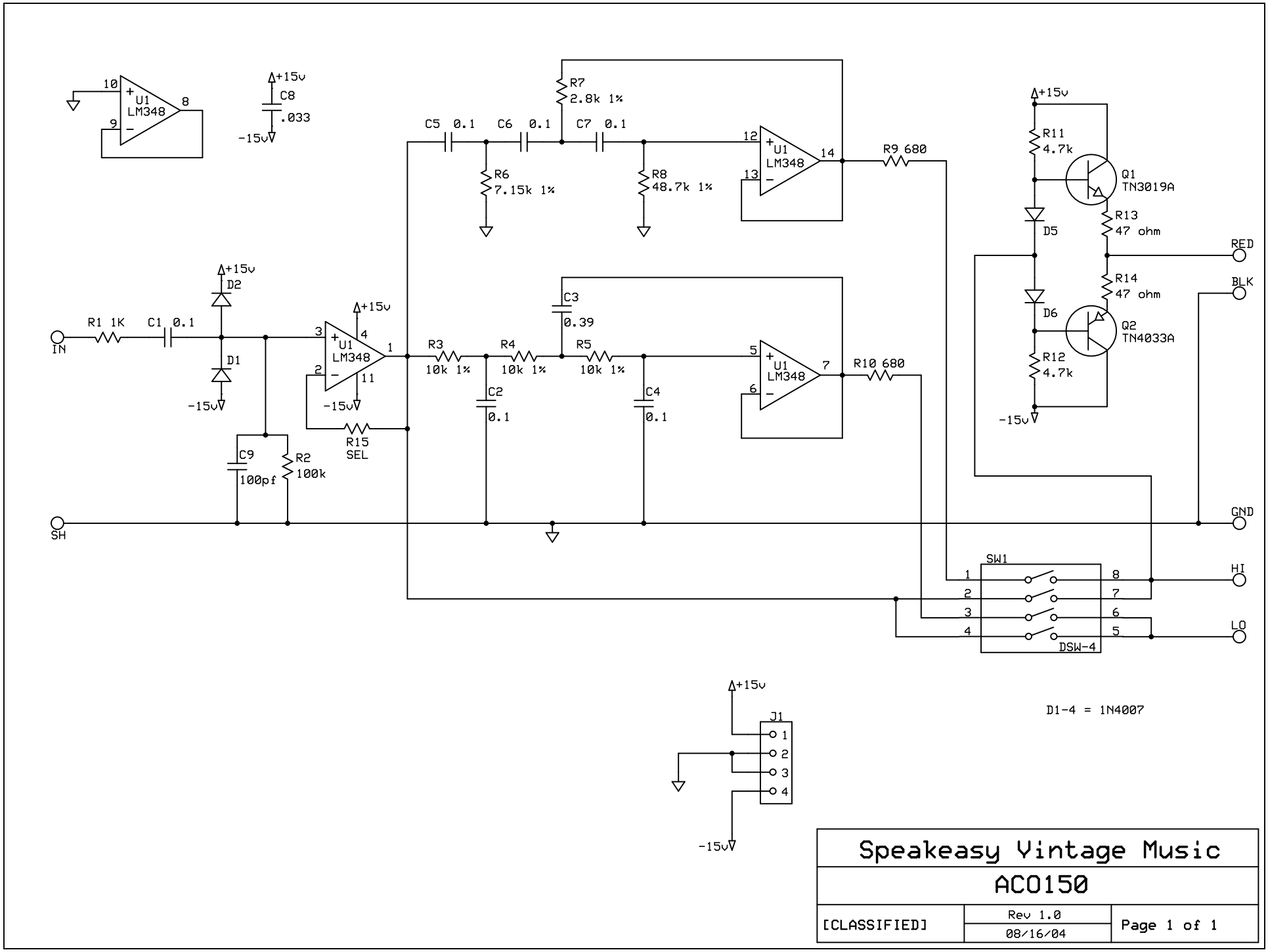

Speakeasy Vintage Music		
AC0150		
[CLASSIFIED]	Rev 1.0 08/16/04	Page 1 of 1